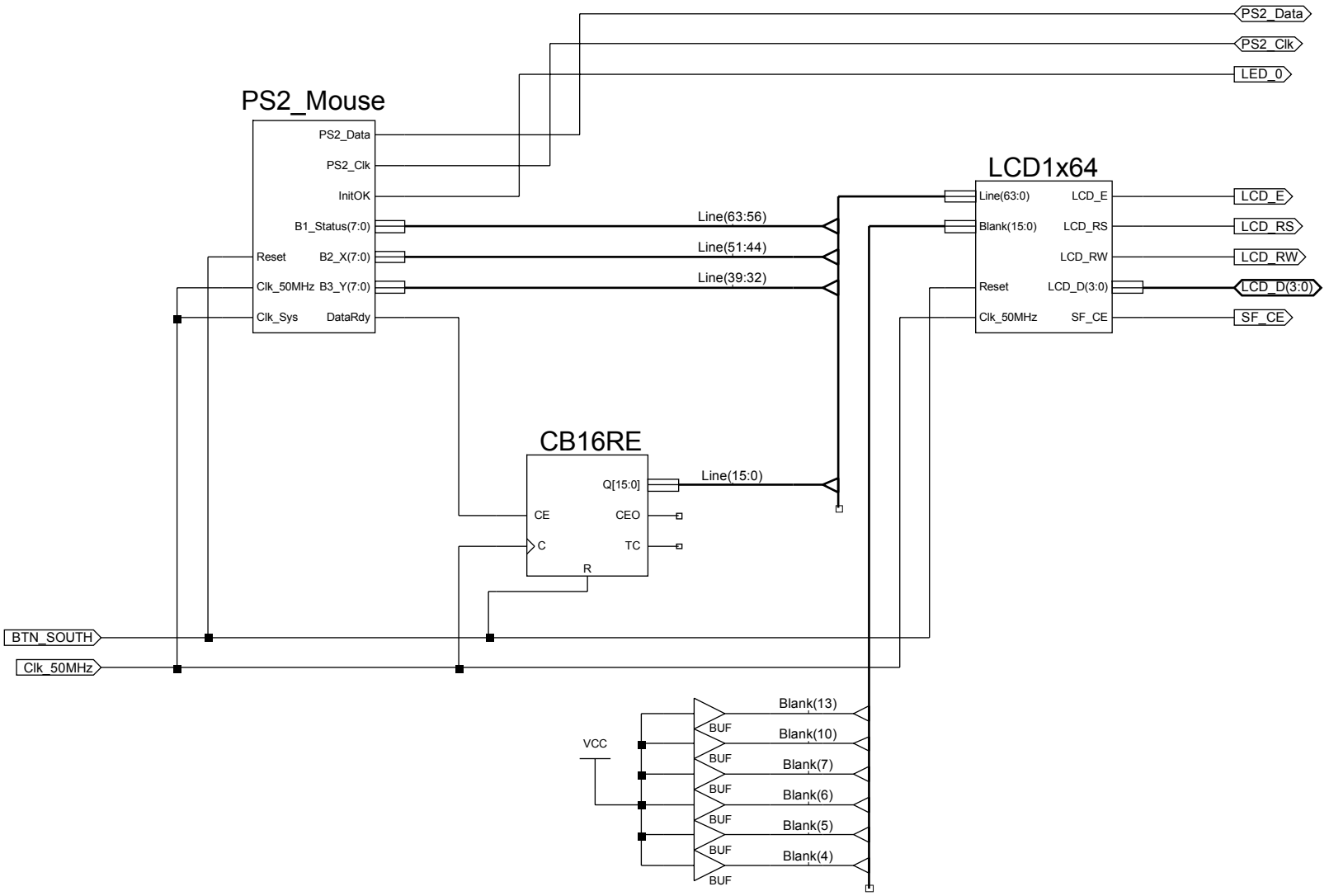

LCD: B1-B2-B3----Cnt4

Test_PS2Mouse

J. Sugier, 2008